Chapter 11 Bodywork and fittings

Contents

Degrees of difficulty

Easy, suitable for novice with little experience	**Fairly easy,** suitable for beginner with some experience	**Fairly difficult,** suitable for competent DIY mechanic	**Difficult,** suitable for experienced DIY mechanic	**Very difficult,** suitable for expert DIY or professional

1 General information

These models feature an all-steel welded construction, where the floorpan and body components are welded together and attached to separate front and rear subframe assemblies. Certain components are particularly vulnerable to accident damage, and can be unbolted and repaired or renewed. Among these parts are the body mouldings, bumpers, bonnet, doors, tailgate, and all glass.

Only general body maintenance procedures and body panel repair procedures within the scope of the do-it-yourselfer are included in this Chapter.

2 Bodywork and underframe - maintenance

The general condition of a vehicle's bodywork is the one thing that significantly affects its value. Maintenance is easy, but needs to be regular. Neglect, particularly after minor damage, can lead quickly to further deterioration and costly repair bills. It is important also to keep watch on those parts of the vehicle not immediately visible, for instance the underside, inside all the wheel arches, and the lower part of the engine compartment.

The basic maintenance routine for the bodywork is washing - preferably with a lot of water, from a hose. This will remove all the loose solids which may have stuck to the vehicle. It is important to flush these off in such a way as to prevent grit from scratching the finish. The wheel arches and underframe need washing in the same way, to remove any accumulated mud, which will retain moisture and tend to encourage rust. Paradoxically enough, the best time to clean the underframe and wheel arches is in wet weather, when the mud is thoroughly wet and soft. In very wet weather, the underframe is usually cleaned of large accumulations automatically, and this is a good time for inspection.

Periodically, except on vehicles with a wax-based underbody protective coating, it is a good idea to have the whole of the underframe of the vehicle steam-cleaned, engine compartment included, so that a thorough inspection can be carried out to see what minor repairs and renovations are necessary. Steam-cleaning is available at many garages, and is necessary for the removal of the accumulation of oily grime, which sometimes is allowed to become thick in certain areas. If steam-cleaning facilities are not available, there are some excellent grease solvents available which can be brush-applied; the dirt can then be simply hosed off. Note that these methods should not be used on vehicles with wax-based underbody protective coating, or the coating will be removed. Such vehicles should be inspected annually, preferably just prior to Winter, when the underbody should be washed down, and any damage to the wax coating repaired. Ideally, a completely fresh coat should be applied. It would also be worth considering the use of such wax-based protection for injection into door panels, sills, box sections, etc, as an additional safeguard against rust damage, where such protection is not provided by the vehicle manufacturer.

After washing paintwork, wipe off with a chamois leather to give an unspotted clear finish. A coat of clear protective wax polish will give added protection against chemical pollutants in the air. If the paintwork sheen has dulled or oxidised, use a cleaner/polisher combination to restore the brilliance of the shine. This requires a little effort, but such dulling is usually caused because regular washing has been neglected. Care needs to be taken with metallic paintwork, as special non-abrasive cleaner/polisher is required to avoid damage to the finish. Always check that the door and ventilator opening drain holes and pipes are completely clear, so that water can be drained out. Brightwork should be treated in the same way as paintwork. Windscreens and windows can be kept clear of the smeary film which often appears, by the use of proprietary glass cleaner. Never use any form of wax or other body or chromium polish on glass.

3 Interior trim - maintenance

Interior trim panels can be kept clean by wiping with a damp cloth. If they do become stained (which can be more apparent on light-coloured trim), use a little liquid detergent and a soft nail brush to scour the grime out of the grain of the material. Do not forget to keep the headlining clean in the same way. After cleaning, application of a high-quality rubber and vinyl protector will help prevent oxidation and cracks. The protector can also be applied to weatherstrips, vacuum lines and rubber hoses, which often fail as a result of chemical degradation, and to the tyres.

4 Upholstery and carpets - maintenance

Mats and carpets should be brushed or vacuum-cleaned regularly, to keep them free of grit. If they are badly stained, remove them from the vehicle for scrubbing or sponging, and make quite sure they are dry before refitting. Seats and interior trim panels can be kept clean by wiping with a damp cloth. If they do become stained (which can be more apparent on light-coloured upholstery), use a little liquid detergent and a soft nail brush to scour the grime out of the grain of the material. Do not forget to keep the headlining clean in the same way as the upholstery. When using liquid cleaners inside the vehicle, do not over-wet the surfaces being cleaned. Excessive damp could get into the seams and padded interior, causing stains, offensive odours or even rot.

HAYNES HINT ***If the inside of the vehicle gets wet accidentally, it is worthwhile taking some trouble to dry it out properly, particularly where carpets are involved. Do not leave oil or electric heaters inside the vehicle for this purpose.***

5 Bodywork repair - minor damage

Note: *For more detailed information about bodywork repair, Haynes Publishing produce a book by Lindsay Porter called "The Car Bodywork Repair Manual". This incorporates information on such aspects as rust treatment, painting and glass-fibre repairs, as well as details on more ambitious repairs involving welding and panel beating.*

Repairs of minor scratches in bodywork

If the scratch is very superficial, and does not penetrate to the metal of the bodywork, repair is very simple. Lightly rub the area of the scratch with a paintwork renovator, or a very fine cutting paste, to remove loose paint from the scratch, and to clear the surrounding bodywork of wax polish. Rinse the area with clean water.

Apply touch-up paint to the scratch using a fine paint brush; continue to apply fine layers of paint until the surface of the paint in the scratch is level with the surrounding paintwork. Allow the new paint at least two weeks to harden, then blend it into the surrounding paintwork by rubbing the scratch area with a paintwork renovator or a very fine cutting paste. Finally, apply wax polish.

Where the scratch has penetrated right through to the metal of the bodywork, causing the metal to rust, a different repair technique is required. Remove any loose rust from the bottom of the scratch with a penknife, then apply rust-inhibiting paint to prevent the formation of rust in the future. Using a rubber or nylon applicator, fill the scratch with bodystopper paste. If required, this paste can be mixed with cellulose thinners to provide a very thin paste which is ideal for filling narrow scratches. Before the stopper-paste in the scratch hardens, wrap a piece of smooth cotton rag around the top of a finger. Dip the finger in cellulose thinners, and quickly sweep it across the surface of the stopper-paste in the scratch; this will ensure that the surface of the stopper-paste is slightly hollowed. The scratch can now be painted over as described earlier in this Section.

Repairs of dents in bodywork

When deep denting of the vehicle's bodywork has taken place, the first task is to pull the dent out, until the affected bodywork almost attains its original shape. There is little point in trying to restore the original shape completely, as the metal in the damaged area will have stretched on impact, and cannot be reshaped fully to its original contour. It is better to bring the level of the dent up to a point which is about 3 mm below the level of the surrounding bodywork. In cases where the dent is very shallow anyway, it is not worth trying to pull it out at all. If the underside of the dent is accessible, it can be hammered out gently from behind, using a mallet with a wooden or plastic head. Whilst doing this, hold a suitable block of wood firmly against the outside of the panel, to absorb the impact from the hammer blows and thus prevent a large area of the bodywork from being "belled-out".

Should the dent be in a section of the bodywork which has a double skin, or some other factor making it inaccessible from behind, a different technique is called for. Drill several small holes through the metal inside the area - particularly in the deeper section. Then screw long self-tapping screws into the holes, just sufficiently for them to gain a good purchase in the metal. Now the dent can be pulled out by pulling on the protruding heads of the screws with a pair of pliers.

The next stage of the repair is the removal of the paint from the damaged area, and from an inch or so of the surrounding "sound" bodywork. This is accomplished most easily by using a wire brush or abrasive pad on a power drill, although it can be done just as effectively by hand, using sheets of abrasive paper. To complete the preparation for filling, score the surface of the bare metal with a screwdriver or the tang of a file, or alternatively, drill small holes in the affected area. This will provide a really good "key" for the filler paste.

To complete the repair, see the Section on filling and respraying.

Repairs of rust holes or gashes in bodywork

Remove all paint from the affected area, and from an inch or so of the surrounding "sound" bodywork, using an abrasive pad or a wire brush on a power drill. If these are not available, a few sheets of abrasive paper will do the job most effectively. With the paint removed, you will be able to judge the severity of the corrosion, and therefore decide whether to renew the whole panel (if this is possible) or to repair the affected area. New body panels are not as expensive as most people think, and it is often quicker and more satisfactory to fit a new panel than to attempt to repair large areas of corrosion.

Remove all fittings from the affected area, except those which will act as a guide to the original shape of the damaged bodywork (eg headlight shells etc). Then, using tin snips or a hacksaw blade, remove all loose metal and any other metal badly affected by corrosion. Hammer the edges of the hole inwards, in order to create a slight depression for the filler paste.

Wire-brush the affected area to remove the powdery rust from the surface of the remaining metal. Paint the affected area with rust-inhibiting paint, if the back of the rusted area is accessible, treat this also.

Before filling can take place, it will be necessary to block the hole in some way. This can be achieved by the use of aluminium or plastic mesh, or aluminium tape.

Aluminium or plastic mesh, or glass-fibre matting, is probably the best material to use for a large hole. Cut a piece to the approximate size and shape of the hole to be filled, then position it in the hole so that its edges are below the level of the surrounding bodywork. It can be retained in position by several blobs of filler paste around its periphery.

Aluminium tape should be used for small or very narrow holes. Pull a piece off the roll, trim

it to the approximate size and shape required, then pull off the backing paper (if used) and stick the tape over the hole; it can be overlapped if the thickness of one piece is insufficient. Burnish down the edges of the tape with the handle of a screwdriver or similar, to ensure that the tape is securely attached to the metal underneath.

Bodywork repairs - filling and respraying

Before using this Section, see the Sections on dent, deep scratch, rust holes and gash repairs.

Many types of bodyfiller are available, but generally speaking, those proprietary kits which contain a tin of filler paste and a tube of resin hardener are best for this type of repair. A wide, flexible plastic or nylon applicator will be found invaluable for imparting a smooth and well-contoured finish to the surface of the filler.

Mix up a little filler on a clean piece of card or board - measure the hardener carefully (follow the maker's instructions on the pack), otherwise the filler will set too rapidly or too slowly. Using the applicator, apply the filler paste to the prepared area; draw the applicator across the surface of the filler to achieve the correct contour and to level the surface. As soon as a contour that approximates to the correct one is achieved, stop working the paste - if you carry on too long, the paste will become sticky and begin to "pick-up" on the applicator. Continue to add thin layers of filler paste at 20-minute intervals, until the level of the filler is just proud of the surrounding bodywork.

Once the filler has hardened, the excess can be removed using a metal plane or file. From then on, progressively-finer grades of abrasive paper should be used, starting with a 40-grade production paper, and finishing with a 400-grade wet-and-dry paper. Always wrap the abrasive paper around a flat rubber, cork, or wooden block - otherwise the surface of the filler will not be completely flat. During the smoothing of the filler surface, the wet-and-dry paper should be periodically rinsed in water. This will ensure that a very smooth finish is imparted to the filler at the final stage.

At this stage, the "dent" should be surrounded by a ring of bare metal, which in turn should be encircled by the finely "feathered" edge of the good paintwork. Rinse the repair area with clean water, until all of the dust produced by the rubbing-down operation has gone.

Spray the whole area with a light coat of primer - this will show up any imperfections in the surface of the filler. Repair these imperfections with fresh filler paste or bodystopper, and once more smooth the surface with abrasive paper. Repeat this spray-and-repair procedure until you are satisfied that the surface of the filler, and the feathered edge of the paintwork, are perfect. Clean the repair area with clean water, and allow to dry fully.

> **HAYNES HiNT** ***If bodystopper is used, it can be mixed with cellulose thinners to form a really thin paste which is ideal for filling small holes***

The repair area is now ready for final spraying. Paint spraying must be carried out in a warm, dry, windless and dust-free atmosphere. This condition can be created artificially if you have access to a large indoor working area, but if you are forced to work in the open, you will have to pick your day very carefully. If you are working indoors, dousing the floor in the work area with water will help to settle the dust which would otherwise be in the atmosphere. If the repair area is confined to one body panel, mask off the surrounding panels; this will help to minimise the effects of a slight mis-match in paint colours. Bodywork fittings (eg chrome strips, door handles etc) will also need to be masked off. Use genuine masking tape, and several thicknesses of newspaper, for the masking operations.

Before commencing to spray, agitate the aerosol can thoroughly, then spray a test area (an old tin, or similar) until the technique is mastered. Cover the repair area with a thick coat of primer; the thickness should be built up using several thin layers of paint, rather than one thick one. Using 400-grade wet-and-dry paper, rub down the surface of the primer until it is really smooth. While doing this, the work area should be thoroughly doused with water, and the wet-and-dry paper periodically rinsed in water. Allow to dry before spraying on more paint.

Spray on the top coat, again building up the thickness by using several thin layers of paint. Start spraying at one edge of the repair area, and then, using a side-to-side motion, work until the whole repair area and about 2 inches of the surrounding original paintwork is covered. Remove all masking material 10 to 15 minutes after spraying on the final coat of paint.

Allow the new paint at least two weeks to harden, then, using a paintwork renovator, or a very fine cutting paste, blend the edges of the paint into the existing paintwork. Finally, apply wax polish.

Plastic components

With the use of more and more plastic body components by the vehicle manufacturers (eg bumpers. spoilers, and in some cases major body panels), rectification of more serious damage to such items has become a matter of either entrusting repair work to a specialist in this field, or renewing complete components. Repair of such damage by the DIY owner is not really feasible, owing to the cost of the equipment and materials required for effecting such repairs. The basic technique involves making a groove along the line of the crack in the plastic, using a rotary burr in a power drill. The damaged part is then welded back together, using a hot-air gun to heat up and fuse a plastic filler rod into the groove. Any excess plastic is then removed, and the area rubbed down to a smooth finish. It is important that a filler rod of the correct plastic is used, as body components can be made of a variety of different types (eg polycarbonate, ABS, polypropylene).

Damage of a less serious nature (abrasions, minor cracks etc) can be repaired by the DIY owner using a two-part epoxy filler repair material. Once mixed in equal proportions, this is used in similar fashion to the bodywork filler used on metal panels. The filler is usually cured in twenty to thirty minutes, ready for sanding and painting.

If the owner is renewing a complete component himself, or if he has repaired it with epoxy filler, he will be left with the problem of finding a suitable paint for finishing which is compatible with the type of plastic used. At one time, the use of a universal paint was not possible, owing to the complex range of plastics encountered in body component applications. Standard paints, generally speaking, will not bond to plastic or rubber satisfactorily. However, it is now possible to obtain a plastic body parts finishing kit which consists of a pre-primer treatment, a primer and coloured top coat. Full instructions are normally supplied with a kit, but basically, the method of use is to first apply the pre-primer to the component concerned, and allow it to dry for up to 30 minutes. Then the primer is applied, and left to dry for about an hour before finally applying the special-coloured top coat. The result is a correctly-coloured component, where the paint will flex with the plastic or rubber, a property that standard paint does not normally possess.

6 Bodywork repair - major damage

1 Major damage must be repaired by a qualified bodywork repair specialist, or preferably by a BMW dealer. Specialised equipment is required to do the job properly.

2 If the damage is extensive, the bodyshell must be checked for proper alignment, or the vehicle's handling characteristics may be adversely affected and other components may wear at an accelerated rate.

3 Due to the fact that all of the major body components (bonnet, wings, etc.) are separate units, any seriously damaged components should be replaced with new ones rather than repaired.

> **HAYNES HiNT** ***Sometimes bodywork components can be found in a scrapyard that specialises in used vehicle components, often at a considerable saving over the cost of new parts.***

9.1 Open the bonnet and remove the grille retaining clips (arrowed)

9.2a The centre grille is held in place by two screws (arrowed)

9.2b Side grille screw locations (arrowed)

7 Hinges and locks - maintenance

Every six months or so, the hinges and lock assemblies on the doors, bonnet and the boot lid/tailgate should be given a few drops of light oil or lock lubricant. The door or tailgate lock strikers should also be lubricated with a thin coat of grease, to reduce wear and ensure free movement.

8 Fixed glass - renewal

Renewal of the windscreen and fixed glass requires the use of special fast-setting adhesive materials, and some specialised tools and techniques. These operations should be left to a dealer service department or windscreen specialist.

9 Radiator grille - removal and refitting

3-Series

1 Detach the clips along the top of the grille **(see illustration)**.

9.14 Remove the screws and pull the side grille assembly straight out

2 Remove the screws, and lift the centre and side grilles out **(see illustrations)**.
3 Refitting is the reverse of removal.

5-Series

E28 ("old-shape") models

6 Remove the screws, and detach the centre and side grille pieces.
7 Refitting is the reverse of removal.

E34 ("new-shape") models

Centre grille
8 Remove the screws and detach the headlight covers in the engine compartment for access.
9 Remove the screw, and lift out the plastic cover behind the centre grille for access to the clips.
10 From the engine compartment, reach under the headlight housings and detach the clips retaining the centre grille valances, then push the grille forwards **(see illustration)**.
11 Use a screwdriver to depress the clips, detach the grille assembly and remove it by pulling it straight out.
12 Refit the centre grille by placing it in position and pushing it straight back until it clips into place.
Side grille
13 Remove the centre grille.
14 Remove the screws, and lift the side grille assembly out **(see illustration)**.
15 Refitting is the reverse of removal.

10 Bonnet - removal, refitting and adjustment

Note: *The bonnet is heavy and somewhat awkward to remove and refit - at least two people should perform this procedure.*

Removal and refitting

3-Series models

1 Open the bonnet. Scribe or draw alignment marks around the bolt heads to ensure proper alignment on refitting **(see illustration)**.
2 Disconnect the earth cable and windscreen washer hose from the bonnet.
3 Detach the bonnet hinge rod clip and

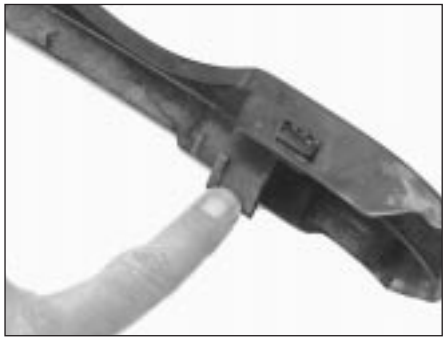

9.10 Detach the centre grille valance by reaching under each headlight and pressing on the release lever

10.1 Use paint or a marking pen to mark on the hinge plate around the bolt heads - mark around the entire hinge plate, if desired, before adjusting the bonnet

10.3a Use needle-nose pliers to pull off the hinge pin clip . . .

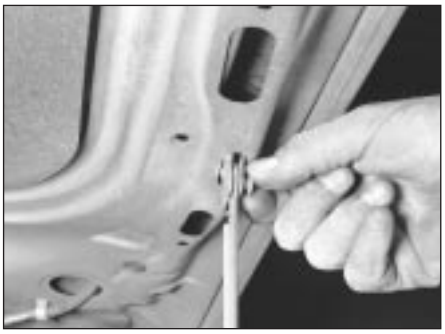

10.3b . . . and pull the hinge pin out while supporting the bonnet

10.8a Use a small screwdriver to prise out the clip pin, then . . .

10.8b . . . prise the retainer out

remove the pin **(see illustrations)**. Be sure to support the bonnet while doing this.

4 Have an assistant hold onto the bonnet on one side while you hold the other side.

5 Remove the bonnet-to-hinge assembly bolts on your side of the bonnet, then hold your side of the bonnet while your assistant removes the bonnet-to-hinge bolts on the other side.

6 Remove the bonnet. Place it somewhere safe where it will not be knocked over, with rags to protect the paintwork where it rests on the ground or against a wall.

7 Refitting is the reverse of removal.

5-Series models

8 Open the bonnet. On some later models, it may be necessary to prise out the plastic clips and remove the insulation pad for access to the bonnet light connector and windscreen washer hoses **(see illustrations)**. Having done this, disconnect the wires and hoses.

9 Detach the clips and withdraw the bonnet support pins **(see illustration)**.

10 Remove the pins from the hinges **(see illustration).**

11 Have an assistant hold onto the bonnet on one side while you hold the other side.

12 Remove the bonnet-to-hinge through-bolt on your side of the bonnet, then hold your side of the bonnet while your assistant removes the through-bolt on the other side **(see illustration)**.

13 Remove the bonnet. Place it somewhere safe where it will not be knocked over, with rags to protect the paintwork where it rests on the ground or against a wall.

14 Refitting is the reverse of the removal.

Adjustment

15 The bonnet can be adjusted to obtain a flush fit between the bonnet and wings after loosening the bonnet hinge bolts. On some 5-Series models, it will be necessary to remove the side grille sections for access to the hinge bolts.

16 Move the bonnet from side to side, or front to rear, until the bonnet is properly aligned with the wings at the front. Tighten the bolts securely.

17 The rear height of the bonnet can be adjusted by loosening the bolts, and raising or lowering the catch **(see illustration)**. After adjustment, tighten the bolts securely.

18 Side-to-side adjustment of the bonnet can be made by loosening the roller guide bolt nuts, and moving the guide position until it slides into the catch properly **(see illustration)**.

10.9 Pull off the clip with needle-nose pliers

10.10 Support the bonnet and withdraw the pin

10.12 Unscrew the hinge through-bolts (arrowed)

10.17 Loosen the bolts (arrowed) and raise or lower the catch to adjust the bonnet height

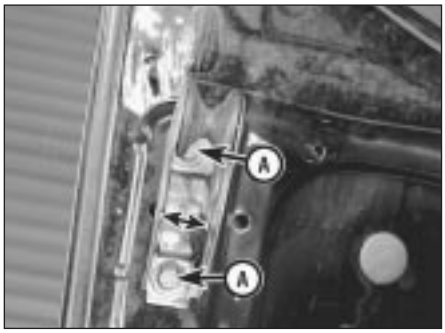

10.18 Loosen the bolts (A) and adjust the roller guide from side to side until it engages securely in the catch

10.19 Screw the bonnet stops in or out after making other adjustments

12.3 On models without electric windows, prise off the window regulator handle trim piece for access to the retaining screw

19 After adjustment, screw the stop pads in or out to support the bonnet in its new position **(see illustration)**.

20 The bonnet mechanism should be lubricated periodically with grease, to prevent sticking or jamming.

11 Bumpers - removal and refitting

Removal

1 Detach the bumper cover (if applicable) and where necessary the front spoiler.

2 Disconnect any wiring or other components that would interfere with bumper removal.

3 Support the bumper with a jack or axle stand. Alternatively, have an assistant support the bumper as the bolts are removed.

4 Remove the retaining bolts and detach the bumper.

Refitting

5 Refitting is a reversal of removal. Tighten the retaining bolts securely, then refit the bumper cover and any other components that were removed.

12 Door trim panel - removal and refitting

Caution: If the radio in your vehicle is equipped with an anti-theft system, make sure you have the correct activation code before disconnecting the battery, Refer to the information on page 0-7 at the front of this manual before detaching the cable.

Note: *If, after connecting the battery, the wrong language appears on the instrument panel display, refer to page 0-7 for the language resetting procedure.*

Removal

1 Disconnect the battery negative cable.

2 Remove all door trim panel retaining screws and door pull/armrest assemblies.

13.4 Detach the circlip (arrowed) from the tapered end of the pin

3 On models with manual (non-electric) windows, remove the window regulator handle **(see illustration)**. On models with electric windows, prise off the control switch assembly and unplug it.

4 Disengage the trim panel-to-door retaining clips. Work around the outer edge until the panel is free.

5 Once all of the clips are disengaged, detach the trim panel, unplug any electrical connectors, and remove the trim panel from the vehicle.

6 For access to the inner door, carefully peel back the plastic water shield.

Refitting

7 Prior to refitting the door trim panel, be sure to renew any clips in the panel which may have come out (or got broken) during the removal procedure.

8 Plug in the electrical connectors (where applicable) and place the panel in position in the door. Press the door panel into place until the clips are seated, then refit the armrest/door pulls. Refit the window regulator handle, where applicable.

13 Door - removal, refitting and adjustment

Removal

1 Remove the door trim panel (see Section 12). Disconnect any electrical connectors, and push them through the door opening so they won't interfere with door removal.

2 Place a trolley jack or axle stand under the door, or have an assistant on hand to support it when the hinge bolts are removed. **Note**: *If a jack or axle stand is used, place a rag between it and the door, to protect the door's painted surfaces.*

3 Scribe or mark around the door hinges.

4 Disconnect the door check strap by prising the circlip out of the end of the pin, then slide the pin out **(see illustration)**. A roll pin is fitted to some models; this is removed by driving it out with a pin punch.

5 Remove the hinge-to-door nuts, and carefully lift off the door **(see illustration)**.

13.5 Remove the nuts (arrowed) and detach the door from the hinges

Refitting and adjustment

6 Refitting is the reverse of removal.

7 Following refitting of the door, check the alignment and adjust it if necessary as follows:

a) Up-and-down and fore-and-aft adjustments are made by loosening the hinge-to-body nuts and moving the door as necessary.

b) The door lock striker can also be adjusted both up and down and sideways, to provide positive engagement with the lock mechanism. This is done by loosening the mounting bolts and moving the striker as necessary ***(see illustration)****.*

14 Boot lid/tailgate - removal, refitting and adjustment

Boot lid

1 Open the boot lid, and cover the edges of the boot compartment with pads or cloths to protect the painted surfaces when the lid is removed.

2 Disconnect any cables or electrical connectors attached to the boot lid that would interfere with removal.

3 Make alignment marks around the hinge bolts **(see illustration)**.

4 Have an assistant support the lid, then remove the lid-to-hinge bolts on both sides and lift it off.

13.7 The door lock striker position can be adjusted after loosening the screws (arrowed)

14.3 Mark around the hinge bolts so you can refit the boot lid in its original location - unscrew or loosen the boot lid-to-hinge bolts to remove or adjust it

14.7a Loosen the lock bolts (arrowed) and move the lock to adjust the boot lid closing position

14.7b Adjust the boot lid lock striker after loosening the bolts (arrowed)

5 Refitting is the reverse of removal. Align the lid-to-hinge bolts with the marks made during removal.

6 After refitting, close the lid and make sure it's in proper alignment with the surrounding panels. Fore-and-aft and side-to-side adjustments are controlled by the position of the hinge bolts in the slots. To make an adjustment, loosen the hinge bolts, reposition the lid, and retighten the bolts.

7 The height of the lid in relation to the surrounding body panels when closed can be changed by loosening the lock and/or striker bolts, repositioning the striker and/or lock, and tightening the bolts **(see illustrations)**.

Caution: If the radio in your vehicle is equipped with an anti-theft system, make sure you have the correct activation code before disconnecting the battery, Refer to the information on page 0-7 at the front of this manual before detaching the cable.

Note: *If, after connecting the battery, the wrong language appears on the instrument panel display, refer to page 0-7 for the language resetting procedure.*

Tailgate

8 Disconnect the battery negative cable.

9 Open the tailgate and cover the rear edge of the roof with pads or cloths to protect the painted surfaces when the tailgate is removed. On 5-Series models, the window may be removed separately by disconnecting the wiring and unscrewing the mounting screws - have an assistant hold the window while the screws are being loosened **(see illustration)**.

10 Remove the trim from the inside of the tailgate. Also where necessary on 5-Series models, remove the edge covers for access to the strut mountings.

11 Disconnect the wiring loom and the washer tubing. On some models, it will be necessary to pull the wiring loom out of the rear pillar and then disconnect the plug **(see illustration)**.

12 While an assistant holds the tailgate open, disconnect the struts on both sides by unscrewing the mounting screws. Where applicable, pull out the retaining pin or spring clip, and remove the strut from the ball **(see illustrations)**.

13 Mark the position of the hinge arms on the tailgate with a pencil.

14 Unscrew the bolts and withdraw the tailgate from the hinge arms. On 5-Series models, it will be necessary to use an Allen key or bit **(see illustration)**.

15 Refitting is the reverse of removal, but make sure that the previously-made marks are correctly aligned. Check that the tailgate closes centrally between the rear pillars and enters the lock correctly.

14.9 Tailgate window mounting screws (5-Series)

14.11 Removing the wiring from the rear pillar (5-Series)

14.12a Removing the tailgate strut spring clip (3-Series)

14.12b Strut mounting on the tailgate (5-Series)

14.12c Removing the retaining pin to disconnect the bottom of the tailgate support strut (5-Series)

14.14 Unscrewing the hinge mounting bolts (5-Series)

15 Latch, lock cylinder and handles - removal, refitting and adjustment

1 Remove the trim panel(s) and, on the door, the plastic shield (see Section 12).

Latch

2 Disconnect the operating rods from the latch **(see illustration)**.
3 Remove the latch retaining screws.
4 Detach the latch assembly and withdraw it.
5 Refitting is the reverse of removal.

Lock cylinder

6 Detach the linkage.
7 Use a screwdriver to slide the retaining clip off, and withdraw the lock cylinder.
8 Refitting is the reverse of removal.

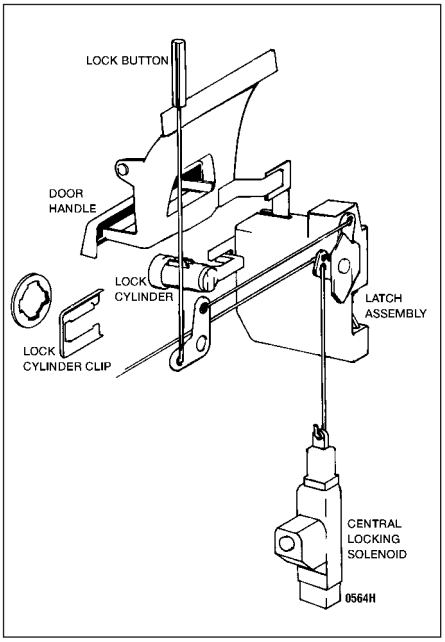

15.2 Typical door latch, lock cylinder and handle details

Interior handle

9 Disconnect the operating rod from the handle.
10 Remove the retaining screws and lift the handle from the door.
11 Refitting is the reverse of removal.

Exterior handle

12 Lift up the handle for access, remove the two retaining screws, then detach the handle from the door.
13 Refitting is the reverse of removal.

16 Door window glass - removal and refitting

Caution: If the radio in your vehicle is equipped with an anti-theft system, make sure you have the correct activation code before disconnecting the battery, Refer to the information on page 0-7 at the front of this manual before detaching the cable.
Note: *If, after connecting the battery, the wrong language appears on the instrument panel display, refer to page 0-7 for the language resetting procedure.*

1 Disconnect the battery negative cable.
2 Remove the door trim panel and the plastic water shield (see Section 12).
3 Prise the door inner and outer weatherstrips from the door.

Front door

4 Raise the window so that the mounting bolts can be reached through the access hole. If electric windows are fitted, temporarily reconnect the battery cable to accomplish this.
5 Support the glass, and remove the retaining bolts securing the glass to the regulator.
6 Lift the window glass up and out of the door window slot, then tilt it and remove it from the door.
7 Refitting is the reverse of removal.

Rear door

8 Carry out the operations described in paragraphs 1 to 5.

3-Series models

9 Disengage the glass from the front guide roller, and prise out the rubber window guides.
10 Remove the door handle screws, and allow the handle assembly to hang out of the way.
11 Remove the rear window frame bolts, push the frame into the door, and remove the window glass.
12 Refitting is the reverse of removal.

5-Series models

13 Loosen the rear window guide mounting bolt.
14 Detach the glass from the front guide roller, disengage the glass from the guide rails, then slide the glass to the rear and remove by lifting from above.
15 The fixed glass can be removed by removing the guide rail bolts, then pulling the rail down to the rear and detaching the glass.
16 Refitting is the reverse of removal. The rear window glass can be adjusted by loosening the adjustment bolts, then raising the glass to within one inch of the top of the door opening. Adjust the glass-to-opening gap evenly, then tighten the bolts securely.

17 Door window regulator - removal and refitting

Removal

1 Remove the door window glass (Section 16).
2 Remove the securing bolts or nuts, and lift the window regulator assembly out of the door (withdraw the regulator mechanism through the access hole). On models with electric windows, unplug the electrical connector.

Refitting

3 Refitting is the reverse of removal.

18 Exterior mirror - removal and refitting

Removal

1 If it is required to renew the mirror glass only, insert a small screwdriver through the hole in the bottom of the exterior mirror, and carefully lever clockwise the plastic holder on the rear of the glass (ie move the bottom of the screwdriver to the right). This will release the glass, which can then be withdrawn. If electric mirrors are fitted, it will be necessary to disconnect the wiring before completely removing the glass.
2 To remove the complete mirror, prise off the cover panel (and/or the tweeter speaker, where applicable).
3 Unplug the electrical connector.
4 Remove the retaining screws and lift the mirror off

Refitting

5 Refitting is the reverse of removal.

19.3 Use a Phillips screwdriver to remove the upper column shroud screws

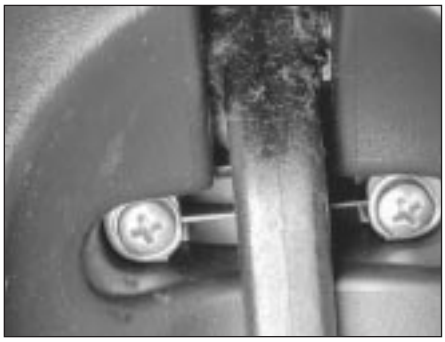

19.4 The lower screws are located under the tilt lever (where fitted)

19.5a Pull the tilt lever down (where fitted), and lower the shroud from the steering column

19 Steering column shrouds - removal and refitting

Caution: If the radio in your vehicle is equipped with an anti-theft system, make sure you have the correct activation code before disconnecting the battery, Refer to the information on page 0-7 at the front of this manual before detaching the cable.

Note: *If, after connecting the battery, the wrong language appears on the instrument panel display, refer to page 0-7 for the language resetting procedure.*

Removal

1 Disconnect the battery negative cable.
2 Remove the steering wheel (Chapter 10).
3 Remove the upper shroud screws **(see illustration)**.
4 Remove the two screws from the underside of the column **(see illustration)**.
5 Detach the lower shroud, then lift the upper half off the column **(see illustrations)**.

Refitting

6 Refitting is the reverse of removal.

20 Seats - removal and refitting

Front seat

1 Remove the four bolts securing the seat track to the floorpan, and lift the seat from the vehicle **(see illustration)**. On some models, it will be necessary to disconnect the seat heating wiring; it may also be necessary to detach the seat belt from the seat.

2 Refitting is the reverse of removal. Tighten the retaining bolts securely.

Rear seat cushion

3 If applicable, first remove the two retaining bolts. Grasp the front of the cushion (Saloon/Convertible models) or the rear of the cushion (Touring/Estate models) securely, and pull up sharply **(see illustration)**.
4 Refitting is the reverse of the removal.

21 Seat belt check

1 Check the seat belts, buckles, lock plates and guide loops for obvious damage and signs of wear.
2 Where applicable, check that the seat belt reminder light comes on when the ignition key is turned to the Run or Start position.
3 The seat belts are designed to lock up during a sudden stop or impact, yet allow free movement during normal driving. Check that the retractors return the belt against your chest while driving and rewind the belt fully when the buckle is unlocked.
4 If any of the above checks reveal problems with the seat belt system, renew parts as necessary.
5 Belts which have been subject to impact loads must be renewed.

19.5b Rotate the upper shroud up and off the steering column

20.1 The front seats are held in place by bolts (arrowed)

20.3 Grasp the seat at the front edge and pull up sharply (Saloon/Convertible models)